PARTICULARS

LENGTH OA	180' (54.864M)
BREADTH MLD.	50' (15.24M)
DEPTH MLD.	10'(3.048M)
DECK LOADING	15 MT/m²
CLASS	ABS

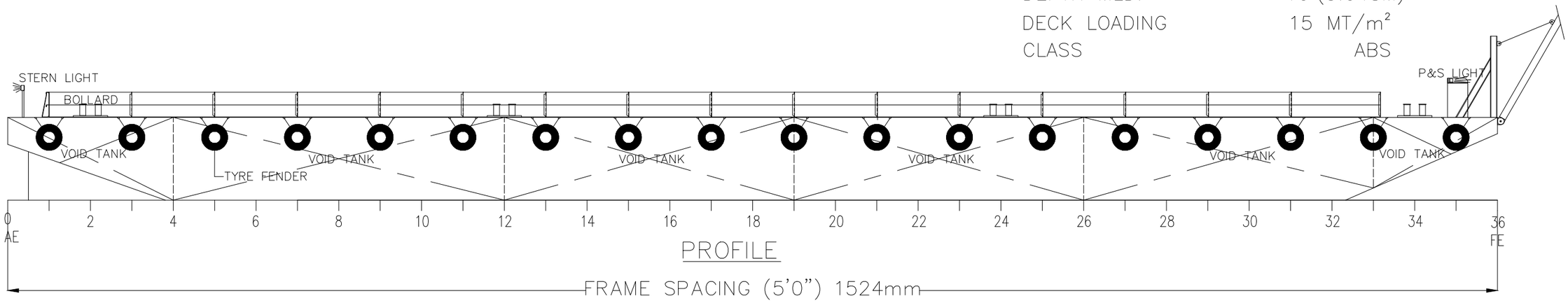

PROFILE

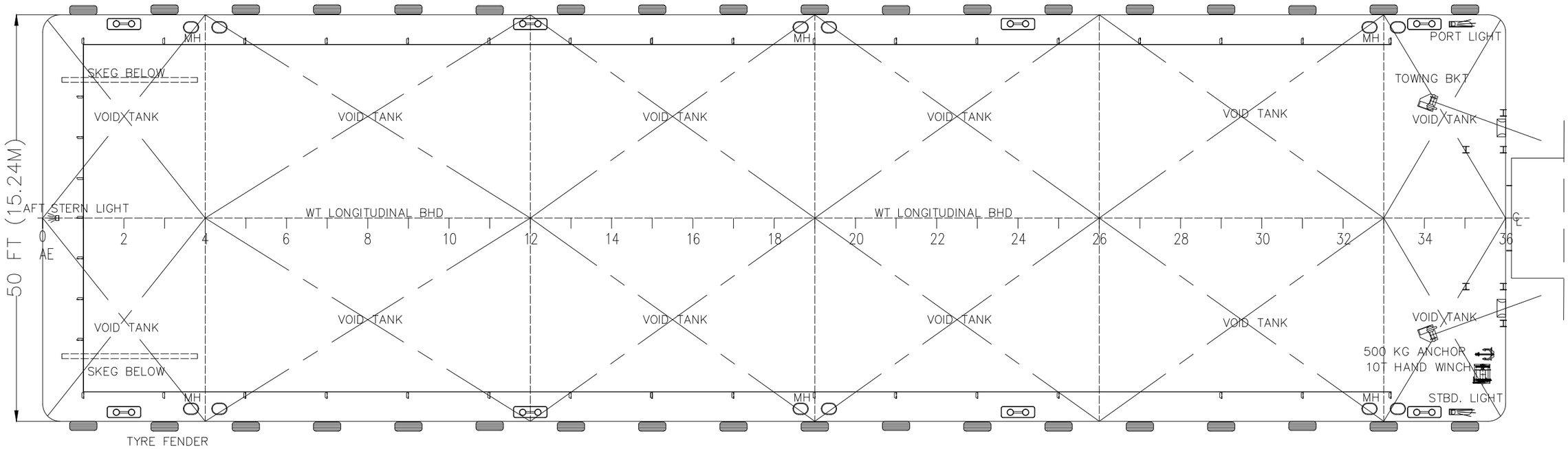

DECK PLAN

GENERAL NOTES	REFERENCE DRAWINGS / DOCUMENTS	REV	DATE	DESCRIPTION	DRAWN BY	CHECKED BY	MSW APPROVAL	ENGINEERING APPROVAL	PROJECT APPROVAL
		0		FIRST ISSUE					

CONTRACT No.
Applicable: ☐Yes ☐No

CONTRACT No.
Applicable: ☐Yes ☐No

Maast maritime

TITLE
GENERAL ARRANGEMENT PLAN
COMARCO 185

SCALE	ORIGINAL SIZE	DWG No.	SHEET/OF	REVISION
1:150	A3		1 OF 1	0